PC30MR-5 E1/PC35MR-5 E1

compact hydraulic excavator

Net horsepower

24.4 HP (18.2 kW) @ 2,200 rpm

Operating weight

With canopy

PC30MR-5 E1: 6,812 lbs. (3,090 kg)
PC35MR-5 E1: 8,201 lbs. (3,720 kg)

With cab

PC30MR-5 E1: 7,143 lbs. (3,240 kg)
PC35MR-5 E1: 8,532 lbs. (3,870 kg)

Blade capacity

PC30MR-5 E1: 0.07–0.21 yd^3 (0.055–0.16 m^3)
PC35MR-5 E1: 0.07–0.24 yd^3 (0.055–0.18 m^3)

Photos in this brochure may show optional equipment.

Net horsepower

24.4 HP (18.2 kW) @ 2,200 rpm

Operating weight

With canopy

PC30MR-5 E1: 6,812 lbs. (3,090 kg)
PC35MR-5 E1: 8,201 lbs. (3,720 kg)

With cab

PC30MR-5 E1: 7,143 lbs. (3,240 kg)
PC35MR-5 E1: 8,532 lbs. (3,870 kg)

Maximum digging depth

PC30MR-5 E1: 9′1″ (2,760 mm)
PC35MR-5 E1: 11′4″ (3,455 mm)

8′ level bottom digging depth

PC30MR-5 E1: 7′5″ (2,260 mm)
PC35MR-5 E1: 9′11″ (3,000 mm)

Performance and versatility

- Standard auxiliary hydraulics
- Standard thumb mounting bracket on PC35MR-5 E1
- Three track options: rubber, steel or roadliner
- Automatic two-speed travel
- ISO/SAE pattern change valve

New engine and hydraulic technology improves operational efficiency and lowers fuel consumption by up to 5%.*

A Komatsu 3D88E-7 engine provides a net output of 24.4 HP (18.2 kW) and is EPA Tier 4 Final emissions certified.

Komatsu's closed-center load sensing system (CLSS) provides quick response and smooth operation to maximize productivity.

Power and economy modes better match the duty cycle to the application.

New large LCD color monitor panel
- 3.5" high-resolution screen
- Provides ecology guidance for fuel efficient operation
- Enhanced attachment control
- Seat belt indicator
- Maintenance information

Equipment management monitoring system (EMMS) continuously monitors machine operation and vital systems to identify machine issues and assist with troubleshooting.

Enhanced working environment
- Mid back, suspension operator seat
- Integrated ROPS cab design (ISO 3741:2008)
- Cab meets ISO Level 1 operator protective guard (OPG) top guard (ISO 10262)
- Two post canopy or optional ROPS cab
- Standard control pattern changer

Minimum swing radius with swing boom allows the PC30MR and PC35MR to fit in confined spaces at job sites.

Proportional pilot-controlled (PPC) joysticks provide fine control and smooth operation.

Standard auxiliary hydraulic circuit piping for attachments

Manual selector valve allows the operator to switch between one-way (breaker) and two-way (thumb) flow.

Standard thumb mounting bracket on PC35MR-5 E1

Chevron-shaped boom cylinder guard provides additional protection.

High-strength X-track frame for easy cleaning.

Large diameter boom swing pin for added durability.

Convenient access
- Optional cab has a large swing open door
- Wide service doors for ground-level service access
- Tilt forward operator platform for easy service

Komatsu auto idle shutdown systems help reduce nonproductive engine idle time and lower fuel consumption.

Komatsu telematics solutions help you collect and analyze telematics data efficiently so you can use it to drive results for business operations. We've designed a system that makes it easy to collect, visualize and monitor telematics data from both Komatsu machines and other OEM machines.

My Komatsu, our comprehensive digital portal, analyzes telemetric data from your on-machine technology — Komtrax and Komtrax Plus, or ISO API 15143-3 (AEMP 2.0) data from other OEMs — and displays it on easy-to-read dashboards. Now you can finally get the powerful analytics you need to manage your costs and enhance your fleet's efficiency without a complicated process or expensive third-party solutions.

* All comparisons are to the prior model, unless otherwise stated.

Performance features

High performance and low fuel consumption

Komatsu's electronic control system, aided by a heavy-duty cooled exhaust gas recirculation (EGR) system and other technologies, helps reduce fuel consumption by up to 5%*.

* Compared with Komatsu's prior models. The above data may differ from actual fuel consumption depending on the type of work. Fuel consumption data is based on in-house comparison test results.

Electronic control system

Provides quick response and smooth operation to maximize productivity.

Selectable two working modes

Power (P) mode for heavy workloads and economy (E) mode for lower fuel consumption. Both can be chosen easily on the monitor panel to match performance to the application.

For heavy workloads
P mode

For lower fuel consumption
E mode

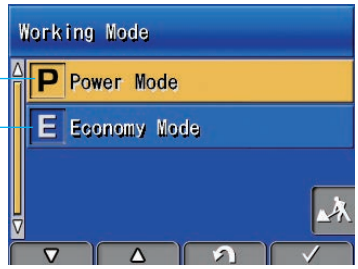

Selection screen of two working modes

Komatsu auto idle shutdown

Komatsu auto idle shutdown* automatically shuts the engine down after idling for a set period of time to reduce unnecessary fuel consumption and exhaust emissions. The amount of time before the engine is shutdown can be easily programmed from 5 to 60 minutes.

* Default setting is OFF.

PC30MR-5 E1

Pattern change valve

A standard pattern change valve provides easy and quick pattern change control between ISO and SAE patterns.

Attachment selector valve

Allows the operator to switch between one-way (breaker) and two-way auxiliary hydraulic flow (thumb).

Boom cylinder guard

A strengthened boom cylinder guard helps protect the boom cylinder.

Boom work lamp

A front working lamp provides illumination to the digging area and is protected by the sides of the boom.

Travel lamp

A front-mounted work lamp improves visibility during night operation and while traveling.

Canopy

Cab

Automatic two speed travel

Conveniently located on the blade control lever, the travel speed selector switch enables the operator to select high speed travel simply by shifting up or down.

Travel switch

Travel pedals

Machine travel can be controlled by hand levers or foot pedals. When travel pedals are not used they can be folded up out of the way to provide more foot space.

Monitor panel

Multifunction monitor with more information

Various alerts and machine information are displayed in a simple format. Useful information, such as operation records, machine setting and maintenance data are also provided. The operator can easily switch screens.

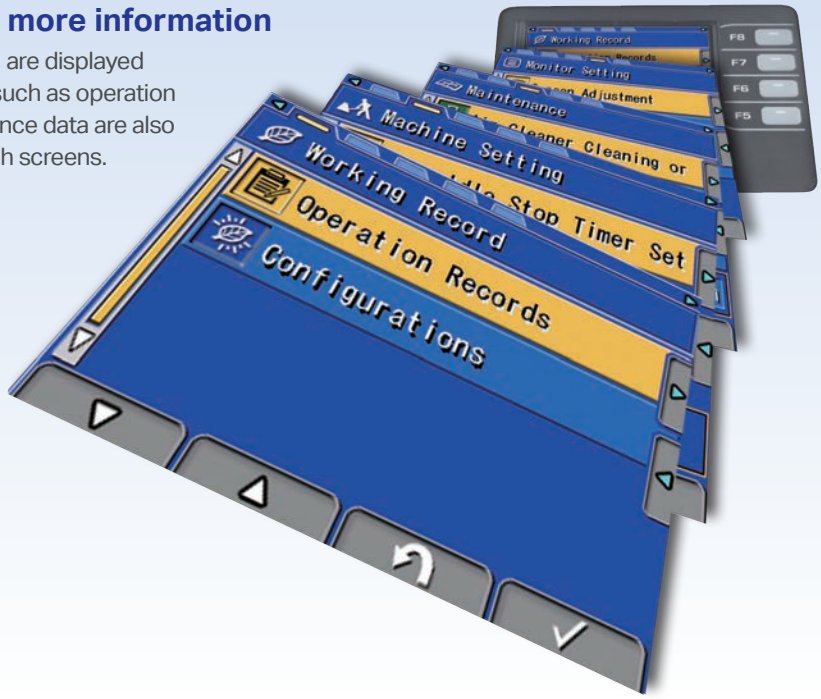

High-definition 3.5" LCD color monitor provides excellent visibility

The high-definition LCD color monitor offers excellent visibility even when viewed in bright light and from off center.

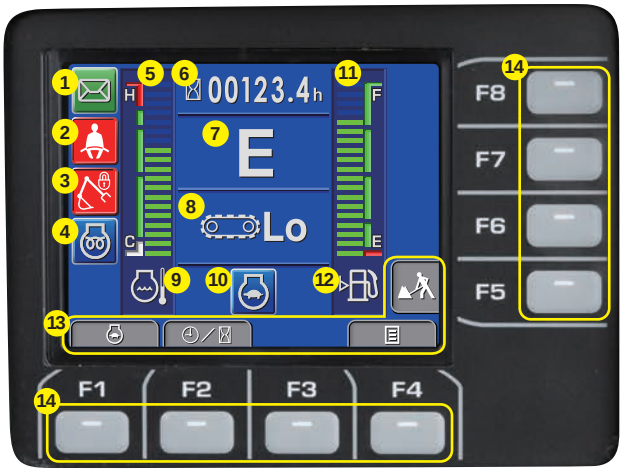

Working record

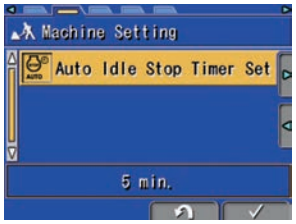

Machine setting

Maintenance

Monitor setting

Indicators, basic operation switches

1 Message	8 Travel mode
2 Seat belt	9 Engine coolant temperature
3 Work equipment lock	10 Auto-decelerator
4 Engine preheating	11 Fuel gauge
5 Engine coolant temperature gauge	12 Low fuel warning
6 Service meter, clock	13 Guidance icons
7 Working mode	14 Function switches

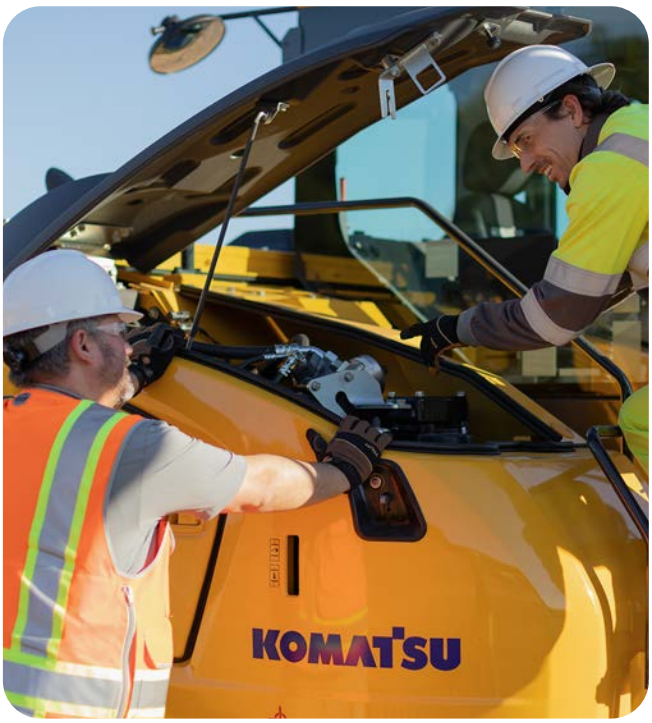
KOMATSU

Operator environment

Two-post canopy compliant with ROPS and OPG Level 1 (top guard)

Equipped with a steel roof, two-post canopy that is ROPS and OPG Level 1 certified, as well as a retractable seat belt, for extra operator peace of mind. The cab model is also compliant with the ROPS and OPG (top guard Level 1) standards.

ROPS: Roll-over protective structures: A mechanism to protect the operator with a seat belt in the event of rolling over. Compliant under the test conditions of ISO 3471.

OPG: Operator protective guards (top guard): A mechanism to protect the operator from falling objects. Compliant with top guard Level 1 of ISO 10262.

The two-post canopy provides excellent forward visibility

There are no canopy structures in front of or to the side of the operator to impede vision to the digging area.

Seat belt caution indicator

A warning light on the monitor appears when the seat belt is not worn.

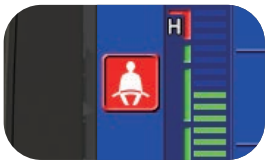

Vinyl semi-high back seat

Provides protection from the elements. Seventy-eight mm (3") retractable retractable seat belt is easy to fasten and release.

Hydraulic accumulator

Allows lowering of boom and arm with engine off.

Other equipment

Hydraulic hose covers

Hoses between the machine and boom are covered by protective hose wrap.

Fan guard

Reflectors

Secondary engine shutdown switch

Operator environment

Spacious and comfortable operator's compartment

The two-post canopy provides an uninterrupted wide field of view. A high-quality interior with well-placed controls and a semi-high back reclining seat provides a comfortable operator work environment.

Standard accessories

Seat with a semi-high back

Wrist rest

Accessory tray

12 V external power outlet

Large cup holder (for canopy)

Optional enclosed cab

Large optional cab provides a comfortable operator environment.

The optional heated and cooled enclosed cab has large flat glass panels and is wider than previous models. The cab conforms to the ISO 3471 ROPS standard for excavators. It also satisfies the requirements for ISO10262 Level 1 operator protective guard (OPG) and top guard.

PC35MR-5 E1

Large door opening

A 17% larger cab door entrance (compared with prior Komatsu models) makes entrance and exit easier.

High capacity air conditioner (A/C)

The optional enclosed cab arrangement includes a high capacity A/C and defrosting system with well located air flow outlets to provide a comfortable year-round operator environment.

Heater with fresh air vents

Standard accessories for cab

Sliding window glass (right side)

Rearview mirrors

Front window with assist

Cup holder (for cab)

Reinforced front glass

Escape hammer

Room lamp

Hanger

Maintenance features

Wide opening service doors and tilting cab platform

Large service compartment doors and tilting cab platform provide simplified daily inspection and maintenance.

Large engine and cooler compartment doors simplify daily inspection and periodic maintenance activities. The operator platform tilts forward providing unimpeded access to hydraulic and engine components for maintenance or repair work.

Easy maintenance

Side-by-side cooling

Radiator and oil coolers are arranged side by side for easy cleaning.

Quick release battery terminal

The negative battery terminal can be easily disconnected without tools to protect the batteries when machine is not operating or is being serviced.

Easier refueling

A large fuel tank cap and filler neck with fuel tank level sight gauge simplify machine refueling.

Fuel system filters

A fuel pre-filter with water separator and a primary fuel filter remove contaminants and help keep the fuel system running efficiently.

Long-life oil filter

The engine oil and engine oil filter replacement interval is 500 hours. Intervals for hydraulic oil and hydraulic oil filters are 2,000 hours and 1,000 hours, respectively. These long replacement intervals reduce costs and maximize uptime.

Hydraulic oil filter
(Ecology White Plus element)

Forward tilting cab platform and large service access doors

Maintenance information and reminders are displayed in an easy-to-understand format in the monitor

Maintenance and service activities are tracked in the monitor. When the time before a maintenance interval dips below 30 hours, a maintenance reminder lamp is illuminated on the display.

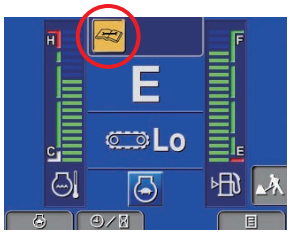

Maintenance reminder

Maintenance screen

Large diameter swing pin

A large diameter swing pin with replaceable abrasion-resistant steel bushing help maintain tight tolerances after long-term operation.

High-strength carbody

An “X” style carbody incorporates Komatsu large excavator experience to provide a high-strength undercarriage with wide openings to simplify track roller frame clean out.

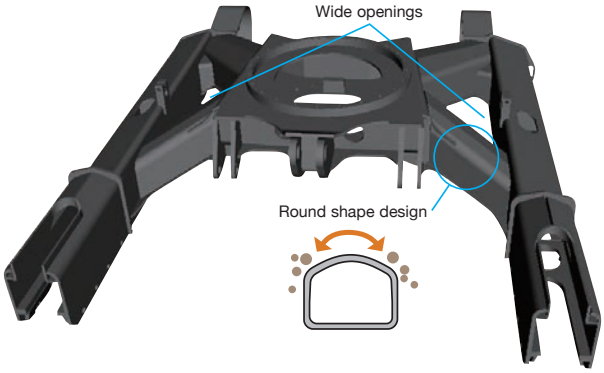

Komatsu helps you bring it all together

Get the most out of your fleet on My Komatsu

We've designed a portal that makes it easy to collect, visualize and monitor data for both Komatsu machines and other OEM machines. My Komatsu also gives you one easy source for accessing manuals and purchasing parts for your machines.

- Quickly collect, view and manage intuitive data displays in one location
- Help keep costs under control
- Benchmark machine performance and track fuel consumption
- Monitor for theft and unauthorized use
- Receive timely maintenance alerts

My Komatsu, our comprehensive portal, analyzes telematics data from your on-machine technology — Komtrax and Komtrax Plus, or from other OEMs — and displays it on easy-to-read dashboards. Now you can get the powerful analytics you need to manage your costs and enhance your fleet's efficiency without a complicated process or expensive third-party solutions.

Data
Telematics data is generated by on-machine technology.

Storage
Telematics data flows into data storage. ISO 15143-3 (AEMP 2.0) facilitates the extraction and raw data to your choice of databases.

Connection
Choose how you want to connect and view your data. Go to multiple systems, send to a third party, or easily connect it all through My Komatsu.

Analytics
My Komatsu connects telematics data from Komatsu and non-Komatsu equipment and creates powerful analytics dashboard views.

mykomatsu.komatsu

Connect your machines to Smart Construction to optimize your job sites

Your projects depend on robust data that is easily shared, replicated, updated and — most important of all — correct.

Take a step toward a digital transformation of your job sites with Komatsu's suite of Smart Construction solutions, where advanced automation and integrated technologies intersect to help you:

- Track costs of labor, machines and materials
- Receive real-time insights straight from the field
- Enhance workflow with fully integrated data
- Visualize your data for actionable results
- Quickly map your job site
- Attract and retain talent

Not sure where to begin? Komatsu-certified solution experts are available on the phone, online or at your job site to help you navigate and thrive along your digitalization journey.

komatsu.com/smart-construction

Komatsu extended maintenance and repair program

Simplify the complexities of machine owning and operating costs and enhance the value of your equipment with Komatsu's extended warranty coverage program and take advantage of attractive financing options. Solutions that fit your needs and ease your mind.

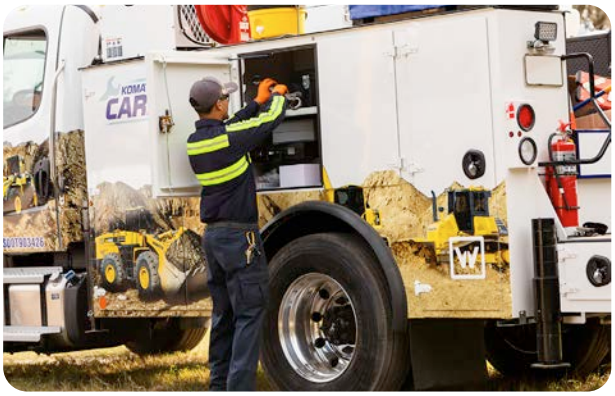

Komatsu Care Advantage Warranty

Extended warranty

Protect your equipment in the event a covered component fails due to a defect in material or workmanship. Repairs are performed by Komatsu-trained experts using Komatsu genuine parts.

komatsu.com/maintenance-repair

Komatsu Financial

Financial services built for your business success.

komatsu.com/financing

Komatsu Genuine Parts

Engineered to help extend the life of your Komatsu machine. Now available on the My Komatsu parts store.

komatsu.com/parts

Komatsu training

Comprehensive training support — virtually, at our facility or where most convenient.

komatsu.com/training

General specification

Engine*

Model		Komatsu 3D88E-7*
Type		Water-cooled, direct injection
Number of cylinders		3
Bore x stroke		88 mm x 90 mm 3.46" x 3.54"
Piston displacement		1.642 L 100.2 in³
Horsepower		
SAE J1995	Gross	18.2 kW 24.4 HP
ISO 9249 / SAE J1349	Net	18.2 kW 24.4 HP
	Rated rpm	2,200
Fan drive method for radiator cooling		Mechanical

*EPA Tier 4 Final emissions certified.

Hydraulics

Number of selectable working modes	2
Main pumps	
Type	Variable displacement piston x 2
Pumps for	Boom, arm, bucket and travel circuits
Maximum flow	32 L/min 18.3 gal/min
Type	Gear x 2
Pumps for	Swing and blade
Swing pump maximum flow	18.7 L/min 4.9 gal/min
Swing pressure maximum	20.1 MPa 2,915 psi
Blade pump maximum flow	9.9 L/min 2.61 gal/min
Blade pressure maximum	21.5 MPa 3,118 psi
Max auxiliary flow rate	50 L/min 13.2 gal/min at 20.5 MPa 2,973 psi
Hydraulic valve	8 spool
Operating method	Hydraulic assist
Travel motor	
Type	Variable displacement piston x 2 (with counterbalance valve and travel shaft brake)
Swing motor	
Type	Fixed displacement piston type x 1 (with brake valve and swing shaft brake)

Hydraulic cylinders (Number of cylinders – bore x stroke x rod diameter)

Boom	(PC30MR-5 E1) 1–85 mm x 525 mm x 50 mm	3.35" x 20.7" x 1.97"
	(PC35MR-5 E1) 1–85 mm x 559 mm x 50 mm	3.35" x 22.0" x 1.97"
Arm	(PC30MR-5 E1) 1–75 mm x 595 mm x 45 mm	2.9" x 23.4" x 1.77"
	(PC35MR-5 E1) 1–75 mm x 595 mm x 45 mm	2.9" x 23.4" x 1.77"
Bucket	(PC30MR-5 E1) 1–65 mm x 490 mm x 40 mm	2.55" x 19.29" x 1.57"
	(PC35MR-5 E1) 1–65 mm x 490 mm x 40 mm	2.55" x 19.29" x 1.57"
Boom swing	(PC30MR-5 E1) 1–80 mm x 500 mm x 40 mm	3.14" x 19.6" x 1.57"
	(PC35MR-5 E1) 1–95 mm x 482 mm x 50 mm	3.74" x 18.97" x 1.97"
Blade	(PC30MR-5 E1) 1–85 mm x 135 mm x 45 mm	3.34" x 5.11" x 1.77"
	(PC35MR-5 E1) 1–95 mm x 140 mm x 45 mm	3.74" x 5.51" x 1.77"

Drives and brakes

Steering control		Two levers with pedals
Drive method		Hydrostatic
Maximum drawbar pull		249 kN 25,400 kg 56,000 lbs.
Gradeability		30°
Maximum travel speed (rubber)		
	High	4.6 km/h 2.85 mph
(Auto-shift)	Low	2.6 km/h 1.61 mph
Service brake		Hydraulic lock
Parking brake		Mechanical disc
Maximum drawbar pull		33 kN 3,400 kgf 7,495 lbf

Undercarriage

Center frame	X-frame
Track frame	Box-section
Track type	Sealed
Track adjuster	Greased gun
Number of carrier rollers (each side)	1
Number of track rollers (each side)	4

Coolant and lubricant capacity (refilling)

Engine	6.7 L	1.77 U.S. gal
Hydraulic system	20 L	5.3 U.S. gal
Cooling system	3.3 L	0.87 U.S. gal
Fuel tank	41 L	10.8 U.S. gal
Final drive, each side	0.6 L	0.15 U.S. gal

Operating weight (approximate)

Operating weight including 2,180 mm 7'2" (PC30MR-5 E1) 2,540 mm 8'4" (PC35MR-5 E1) one-piece boom, 1,370 mm 4'6" (PC30MR-5 E1) 1,720 mm 5'8" (PC35MR-5 E1) arm, .09 m³ 3.17 ft³ (PC30MR-5 E1) .11 m³ 3.88 ft³ (PC35MR-5 E1)bucket, blade, rated capacity of lubricants, coolant , full fuel tank, operator and standard equipment.

PC30MR-5 E1			
ROPS canopy, rubber belt track 300 mm 12"		ROPS cab, rubber belt track 300 mm 12"	
Operating weight	Ground pressure ISO 16754	Operating weight	Ground pressure ISO 16754
3,090 kg 6,812 lbs.	26.7 kPa 3.87 psi	3,240 kg 7,143 lbs.	29.3 kPa 4.25 psi

PC35MR-5 E1			
ROPS canopy, rubber belt track 300 mm 12"		ROPS cab, rubber belt track 300 mm 12"	
Operating weight	Ground pressure ISO 16754	Operating weight	Ground pressure ISO 16754
3,720 kg 8,201 lbs.	35.9 kPa 5.20 psi	3,870 kg 8,532 lbs.	35.0 kPa 5.07 psi

Component weights

	PC30MR-5 E1	PC35MR-5 E1
300 mm 12" Steel tracks	+100 kg 220 lbs.	+100 kg 220 lbs.
300 mm 12" Road liner tracks	+140 kg 308 lbs.	+140 kg 308 lbs.

Blade

Width x height	
PC30MR-5 E1	1550 mm x 355 mm 5'1" x 1'2"
PC35MR-5 E1	1740 mm x 355 mm 5'9" x 1'2"

* E1 denotes new engine part number

Dimensions

		PC30MR-5 E1		PC35MR-5 E1	
	Boom length	2285 mm	7'6"	2540 mm	8'4"
	Arm length	1240 mm	4'1"	1720 mm	5'8"
A	Overall length	4560 mm	15'0"	4825 mm	15'10"
B	Overall height	2520 mm	8'3"	2520 mm	8'3"
C	Overall width	1550 mm	5'1"	1740 mm	5'9"
D	Ground clearance, counterweight	545 mm	1'9"	545 mm	1'9"
E	Ground clearance (minimum)	305 mm	1'0"	290 mm	11"
F	Tail swing radius	790 mm	2'7"	870 mm	2'10"
G	Track length on ground	1650 mm	5'5"	1650 mm	5'5"
H	Track length	2105 mm	6'11"	2105 mm	6'11"
I	Track gauge	1250 mm	4'1"	1440 mm	4'9"
J	Shoe width	300 mm	1'0"	300 mm	1'0"
K	Machine upper width	1500 mm	4'11"	1500 mm	4'11"
L	Distance, swing center to end of tracks	1050 mm	3'5"	1050 mm	3'5"
M/N	Boom swing angle degrees	LH80°/RH50°		LH75°/RH55°	
O	Bucket offset LH	580 mm	1'11"	580 mm	1'11"
P	Bucket offset RH	845 mm	2'9"	770 mm	2'6"

With rubber tracks

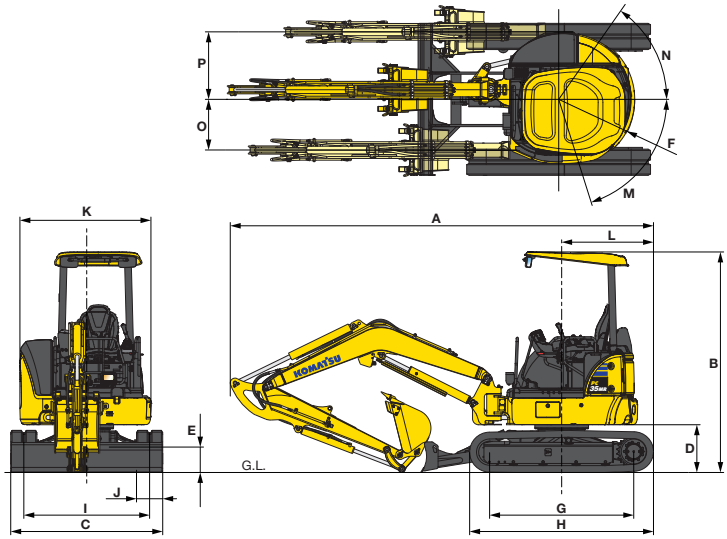

Three track versions available

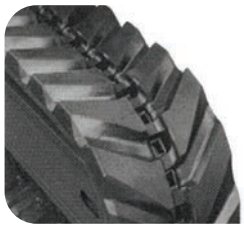
Rubber belt track

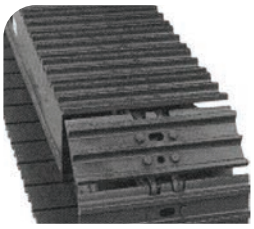
Steel*

Roadliner

* Steel tracks available only on the PC35MR-5 E1

General specification

Working range

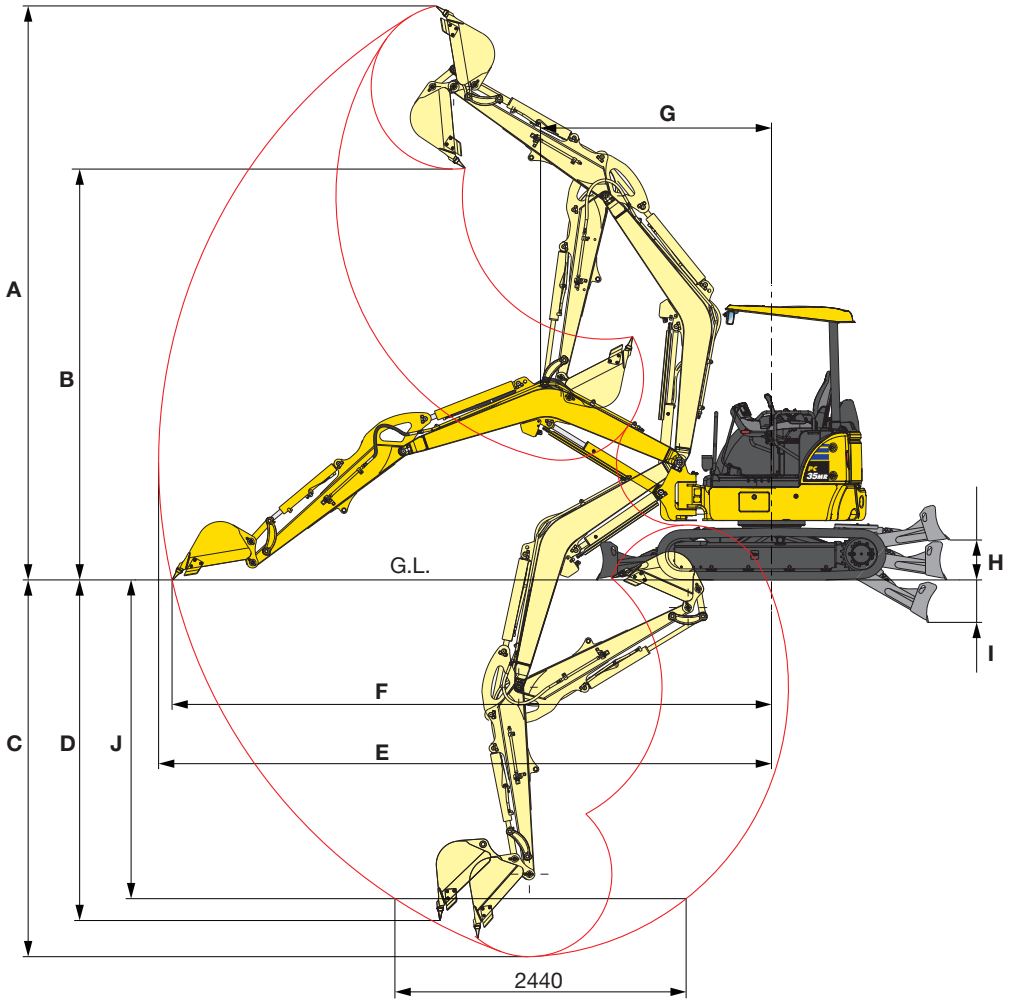

		PC30MR-5 E1		PC35MR-5 E1	
	Boom length	2,285 mm	7'6"	2,540 mm	8'4"
	Arm length	1,240 mm	4'1"	1,720 mm	5'8"
A	Maximum digging height	4,565 mm	14'7"	4,900 mm	16'9"
B	Maximum dumping height	3,090 mm	10'7"	3,400 mm	11'9"
C	Maximum digging depth	2,760 mm	9'1"	3,455 mm	11'4"
D	Maximum vertical wall digging depth	2,400 mm	7'10"	3,120 mm	10'3"
E	Maximum digging reach	5,050 mm	16'7"	5,640 mm	18'6"
F	Maximum digging reach at ground	4,910 mm	16'1"	5,520 mm	18'1"
G	Minimum swing radius (boom straight ahead) Minimum swing radius (boom articulated)	2,235 mm 1,670 mm	7'4" 5'6"	2,250 mm 1,805 mm	7'5" 5'11"
H	Maximum blade lift	360 mm	1'2"	360 mm	1'2"
I	Maximum blade depth	310 mm	1'0"	390 mm	1'3"
J	Maximum digging depth of cut for 2,440 mm 8' level floor	2,260 mm	7'5"	3,000 mm	9'11"
ISO 6015 rating	Bucket digging force	29.5 kN 6,631 lbs.		29.9 kN 6,722 lbs.	
	Arm crowd force	17.7 kN 3,979 lbs.		20.6 kN 4,631 lbs.	

With rubber belt tracks

Lifting capacity with lifting mode: PC30MR-5 E1

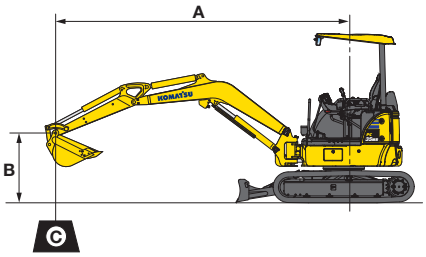

A: Reach from swing center
B: Bucket hook height
C: Lifting capacity
Cf: Rating over front
Cs: Rating over side
Rating at maximum reach

Conditions:
- Boom length: 2,285 mm 7' 6" one-piece boom
- Arm length: 1,240 mm 4' 1"
- 300 mm 12" rubber belt tracks
- Blade on ground
- 0.09 m³ 3.18 ft³ bucket
- Bucket weight: 62.5 kg 138 lbs.
- Counterweight: 265 kg 518 lbs.

Unit: kg lbs.

A / B	2.0 m 6.5' Cf	2.0 m 6.5' Cs	3.0 m 10' Cf	3.0 m 10' Cs	4.0 m 13' Cf	4.0 m 13' Cs	Max Cf	Max Cs
3.0 m			755	465			825	285
10'			1664	1025			1819	628
2.0 m			1005	440	835	260	825	220
6.5'			2216	970	1841	573	1819	485
1.0 m			1325	390	920	240	845	200
3.25'			2921	860	2028	529	1863	441
0 m	2670	655	1445	360	930	230	875	205
0'	5886	1444	3186	794	2050	507	1929	452
-1.0 m	2155	665	1255	355			885	255
-3.25'	4751	1466	2767	783			1951	562

*Asterisk indicates load is limited by hydraulic capacity rather than tipping. Ratings are based on ISO standard No. 10567. Rated load capacity does not exceed 87% of hydraulic lift capacity or 75% of tipping load. Lift capacities shown above are with the specified bucket installed. Different installed attachments will change the stated lift capacities by the net difference in attachment weights. Lift capacity chart is based on machine located on a solid, level and uniform surface. Load ratings are at the arm bucket pin location, use of any attachment point in a different location to handle objects could affect excavator lift performance.

Lifting capacity with lifting mode: PC35MR-5 E1

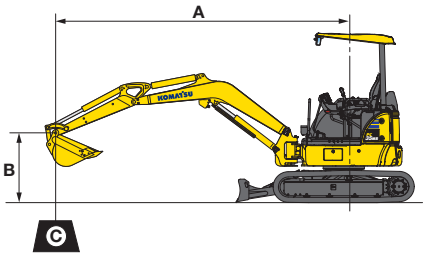

A: Reach from swing center
B: Bucket hook height
C: Lifting capacity
Cf: Rating over front
Cs: Rating over side
Rating at maximum reach

Conditions:
- Boom length: 2,540 mm 8' 4" one-piece boom
- Arm length: 1,720 mm 5' 8"
- 300 mm 12" rubber belt tracks
- Blade on ground
- 0.09 m³ 3.18 ft³ bucket
- Bucket weight: 62.5 kg 138 lbs.
- Counterweight: 650 kg 1,433 lbs.

Unit: kg lbs.

A / B	2.0 m 6.5' Cf	2.0 m 6.5' Cs	3.0 m 10' Cf	3.0 m 10' Cs	4.0 m 13' Cf	4.0 m 13' Cs	Max Cf	Max Cs
3.0 m					595	410	615	340
10'					1312	904	1356	750
2.0 m			795	660	680	400	640	285
6.5'			1753	1455	1499	882	1411	628
1.0 m			1165	610	815	380	675	265
3.25'			2568	1345	1797	838	1488	584
0 m	2735	1085	1390	575	910	365	720	265
0'	6030	2392	3064	1268	2006	805	1587	584
-1.0 m	2470	1090	1370	565	880	360	770	320
-3.25'	5445	2403	3020	1246	1940	794	1698	705

*Asterisk indicates load is limited by hydraulic capacity rather than tipping. Ratings are based on ISO standard No. 10567. Rated load capacity does not exceed 87% of hydraulic lift capacity or 75% of tipping load. Lift capacities shown above are with the specified bucket installed. Different installed attachments will change the stated lift capacities by the net difference in attachment weights. Lift capacity chart is based on machine located on a solid, level and uniform surface. Load ratings are at the arm bucket pin location, use of any attachment point in a different location to handle objects could affect excavator lift performance.

Equipment

Engine

Air cleaner, double element with auto dust evacuator	●
B20 biodiesel fuel lines	●
Cooling fan, suction type	●

Electrical system

Alternator, 12 V/55 A	●
Auto-decelerator	●
Battery, 1 x 12 V/58 Ah	●
Front travel light	●
Starting motor 12 V/1.7 kW	●
Working light on boom	●

Hydraulic system

Auxiliary hydraulics with one-way/two-way flow selector valve	●
ISO/SAE pattern change valve	●

Guards and covers

Fan guard	●
Thermal guard	●

Undercarriage

Shoe, 300 mm 12" rubber belt track	●
Road Liner track, 300 mm 12"	○
Steel track*, 300 mm 12"	○

Operator environment

12 V x 1 power supply	●
Automatic two-speed travel control	●
High-resolution 3.5" LCD color monitor	●
Lock lever auto lock function	●
Rearview mirrors (RH, LH)	●
Retractable seat belt, 78 mm 3"	●
Suspension seat	●
Travel alarm	●
Two-post ROPS (ISO 3471) canopy	●
Cab with A/C, radio ready, auxiliary input (3.5 mm jack) ready	○
Proportional joysticks	●
Level 1 mesh front screen (cab only)	○
Level 1 mesh front screen field installation kit (cab only)	○

Work equipment

Arms	●
1,240 mm 48.8" arm assembly with piping (PC30MR-5 E1)	
1,720 mm 67.7"arm assembly with piping (PC35MR-5 E1)	
Backfill blade	●
Booms	●
2,285 mm 7'6" boom assembly with piping (PC30MR-5 E1)	
2,540 mm 8'4" boom assembly with piping (PC35MR-5 E1)	
Buckets	○
300 mm 12" HD bucket	
457 mm 18" HD bucket	
610 mm 24" HD bucket	
Hydraulic breaker	○
Hydraulic thumb	○
Mechanical quick coupler	○

Other equipment

Auto idle shutdown	●
Komtrax	●
Quick release battery terminal (-)	●
Swing holding brake	●
Counterweight	●
—PC30MR-5 E1, 265 kg 518 lbs.	
—PC35MR-5 E1, 650 kg 1,433 lbs.	

For a complete list of available attachments, please contact your local Komatsu distributor.

* Not available on PC30MR-5 E1

Standard equipment	●
Optional equipment	○

Product designs, specifications and/or data in this document are provided for informational purposes only and are not warranties of any kind. Product designs and/or specifications may be changed at any time without notice. The only warranties that apply to sales of products and services are Komatsu's standard written warranties, which will be furnished upon request.

Komatsu and other trademarks and service marks used herein are the property of Komatsu Ltd., Komatsu America Corp., Komatsu Mining Corp., or one of their affiliates, or the respective owners or licensees.

© 2025 Komatsu America Corp. All rights reserved. EN-PC30-PC35-5-BR01-0325-V2

KOMATSU

komatsu.com